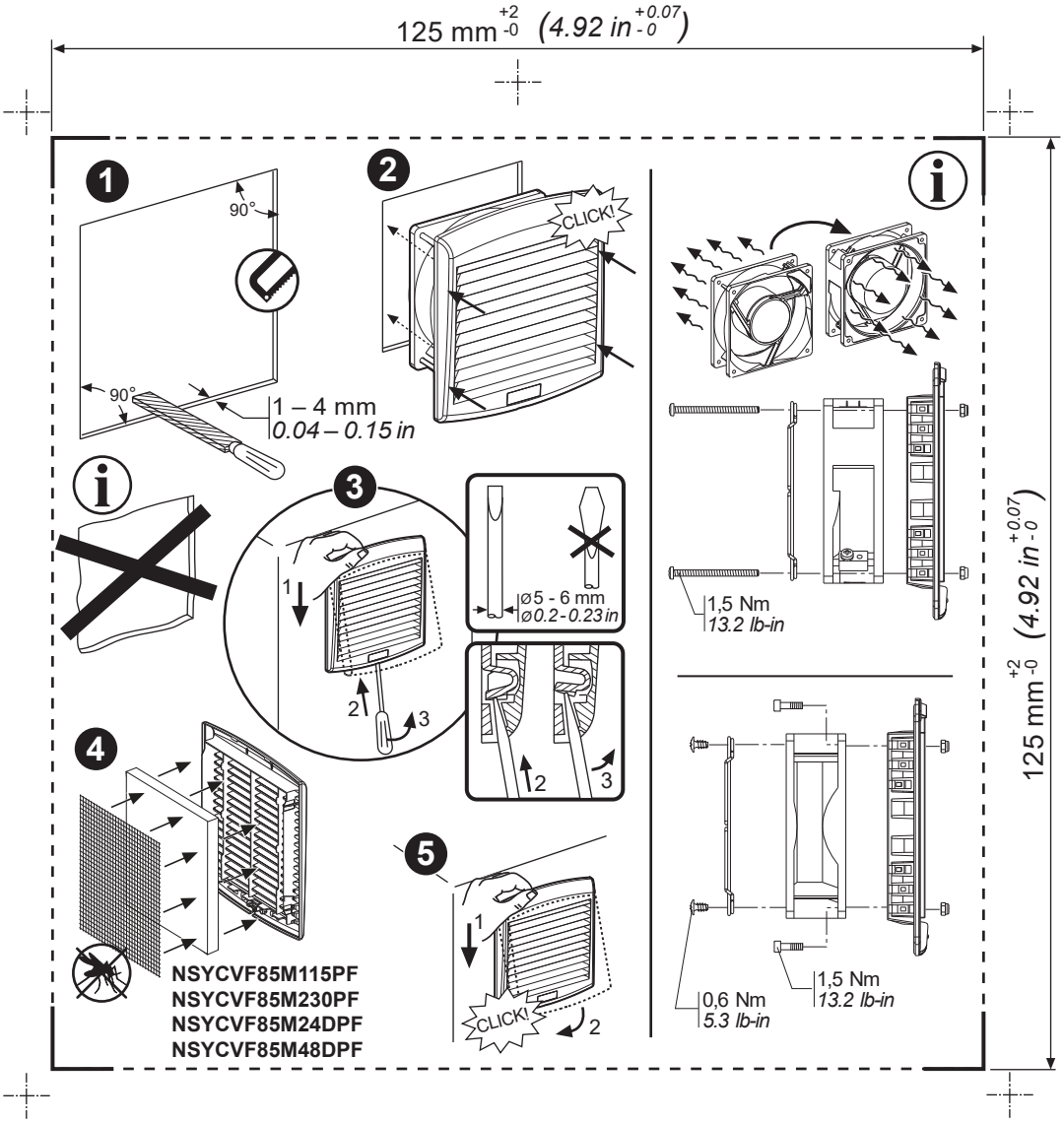
125 mm +2 -0 (4.92 in +0.07 -0)
1
90°
90°
1 – 4 mm
0.04 – 0.15 in
2
CLICK!
3
1
2
3
ø5 - 6 mm
ø0.2 - 0.23 in
2
3
4
NSYCVF85M115PF
NSYCVF85M230PF
NSYCVF85M24DPF
NSYCVF85M48DPF
5
1
CLICK!
2
1,5 Nm
13.2 lb-in
0,6 Nm
5.3 lb-in
1,5 Nm
13.2 lb-in
125 mm +2 -0 (4.92 in +0.07 -0)